Integrating Game Theory into Deep Learning for Enhanced Applications

Sreypich Men, *CY Tech University*, Paris, French

Foreword: This study explores the synergy between game theory and deep learning to advance artificial intelligence (AI). Game theory is employed to simulate strategic interactions and decision-making processes, while deep learning extracts valuable insights from extensive datasets. The fusion of these disciplines enhances AI's strategic reasoning and data-driven learning capabilities, fostering the development of more robust and adaptive AI models, especially in multi-agent systems. Various real-world applications illustrate the potential of this integrated approach, underscoring AI's positive impact on human-machine interactions.

I. Introduction

Combining game theory and deep learning creates a powerful framework for managing complex, evolving strategic decision-making processes. Game theory, a mathematical study of strategic interactions where individual outcomes is influenced by others' actions, is applied across economics, psychology, and computer science. It examines players' roles, strategies, and payoffs in competitive and cooperative settings.

Deep learning, a subset of machine learning, leverages multi-layer neural networks to analyze and represent intricate data patterns. It has significantly advanced fields like image and audio recognition, natural language processing, and autonomous driving. Together, game theory and deep learning enhance the capability to tackle complex tasks in dynamic environments with multiple interacting agents. For instance, in reinforcement learning, agents learn optimal behaviors through experimentation, guided by the Bellman equation to maximize long-term benefits. Game theory's consideration of mutual dependence in agents' actions, combined with deep learning's outcome prediction and modeling of complex functions, significantly improves handling real-world problems. This synergy is particularly effective in scenarios requiring both competition and collaboration, such as multi-agent systems, competitive markets, and strategic AI development.

II. Basics and Background

1. Game Theory

Game theory is a mathematical structure for evaluating situations in which people make mutually dependent strategic decisions. This means that the outcome for each player is determined by both their own and others' decisions. Game theory is utilized in a variety of domains, including economics, political science, psychology, and computer science, to model and investigate competitive and cooperative interactions.

1.1. Key Components of Game Theory

- **The players**: in the game, players make the decisions. Individuals, businesses, governments, animals, and other entities making strategic decisions can all be players.
- **Strategies**: A strategy is a detailed plan of action that a player will employ in all games. Based on the information provided and their goals, each player selects one of several strategies.
- **Payoffs**: The payoff is the result of a player choosing a specific strategy in a given situation, which is frequently influenced by the methods chosen by all other players. Payoffs are the value or utility that players receive at the end of the game, reflecting each player's preference among possible results.
- **Information**: This component defines what each player knows at the time they make decisions, which can significantly affect the strategies they choose. Games can be of perfect information, where all past actions are known to all players, or imperfect information, where some elements are unknown.
- **Equilibrium**: In game theory, an equilibrium is a set of strategies where no player can benefit by changing strategies while the other players' strategies remain unchanged. The most common type of equilibrium is the Nash Equilibrium, named after John Nash, which occurs when each player's strategy is optimal, given the strategies of others.

1.2.Concepts in Game Theory

- **Nash Equilibrium**: This is a fundamental notion in game theory that predicts the result of strategic interactions in which no party benefits by unilaterally changing their approach.
- **Zero-Sum Games**: In these games, the net reward to all participants equals zero (or a constant). That is, a player's gain leads another player to lose.
- **Non-Zero-Sum Games**: These games reflect circumstances in which the total payoff for all participants varies depending on their behavior. These are more representative of real-world instances in which mutual benefit is feasible.
- **Repeated Games:** These games deal with situations in which players participate frequently. The strategies could change depending on past results, resulting in potentially different strategies compared to just one interaction.
- **Cooperative Games:** In these games, participants can create coalitions and reach binding agreements to share strategies and payoffs. These are especially valuable for understanding corporate negotiations and political coalitions.

2. Deep Learning

Deep learning is a transformative branch of machine learning that leverages neural networks with multiple layers to interpret vast amounts of data. It's often distinguished by its ability to process and learn from unstructured data like images, sounds, and text autonomously, making it a cornerstone in natural language processing and computer vision advancements.

2.1. Key features of deep learning

- **Capability to Learn Hierarchies of Features**: Deep learning algorithms automatically learn to recognize features at multiple levels of abstraction, allowing the model to understand complex structures in data.
- **End-to-end Learning:** These models are trained end-to-end, typically from raw data directly to the task outcome, reducing the need for manual feature extraction.
- **Flexibility and Adaptability:** Deep learning models can adapt to new, unseen data, thanks to their ability to generalize from the information they've been trained on.
- **Large Data Handling:** They excel in environments where massive amounts of data are available, often outperforming other machine learning techniques as the data volume grows.

2.2. Deep learning architecture

Deep learning architectures are structured in a layered format where each layer is designed to recognize different aspects of the data.

Convolutional Neural Networks (CNNs): Excellent for spatial data like images; these networks use convolutional layers that filter inputs for useful information.

Recurrent Neural Networks (RNNs): Effective for sequential data like text or time series. RNNs have feedback loops helping them retain information over time.

Autoencoders: Used for unsupervised learning tasks such as dimensionality reduction or feature learning.

Generative Adversarial Networks (GANs): Consist of two networks, a generator and a discriminator, that are trained simultaneously to generate new data samples.

2.3. Deep learning technique

- Deep learning employs various techniques to enhance performance and training effectiveness:
- **Backpropagation:** A method for optimizing the neural network by adjusting weights in reverse order from output to input.
- **Dropout:** A regularization technique that involves randomly dropping units from the neural network during training to prevent overfitting.
- **Transfer Learning:** Utilizing a pre-trained model on a new, related task to leverage previous learnings and reduce the need for extensive data.
- **Data Augmentation:** Increasing the diversity of your training set by applying random, yet realistic, transformations to the training images, such as rotation and scaling.

3. Bellman Method

Bellman's method of optimization, also known as dynamic programming, is a technique used to solve complex problems by breaking them down into simpler subproblems, solving each once, and storing their solutions. In strategic and coalition games within game theory, dynamic programming is particularly useful for determining optimal strategies where decisions impact future outcomes. It enables the analysis of sequential decisions in strategic games and the optimal allocation of resources in coalition games. By employing the principle of optimality, dynamic programming

ensures that the decisions made at each stage contribute to an overall optimal strategy, making it a powerful tool in both strategic and coalition game analysis.

For example: The managers of an international aircraft company are tasked with deciding whether to upgrade equipment on their planes and helicopters, all of which have a five-year effective lifespan. Over a four-year period, they must assess annually whether to keep the existing equipment or replace it with new gear of the same type. This decision-making process involves considering several key pieces of historical data: the age of the equipment at the beginning of each year, the probability of needing a replacement in the next year, the maintenance costs from one year to the next, and the cost of purchasing new equipment. These factors are crucial as they influence the financial and operational efficiency of maintaining or renewing the aircraft equipment. Based on this, we construct the showing figure of 5 years period and decisions to make to buy or keep using bellman method. Following this, we get to see how each node connected to next nodes in each period and learning through each layer to get the best decisions in the future using bellman method. It also reflects with how neutral network of deep learning working process too.

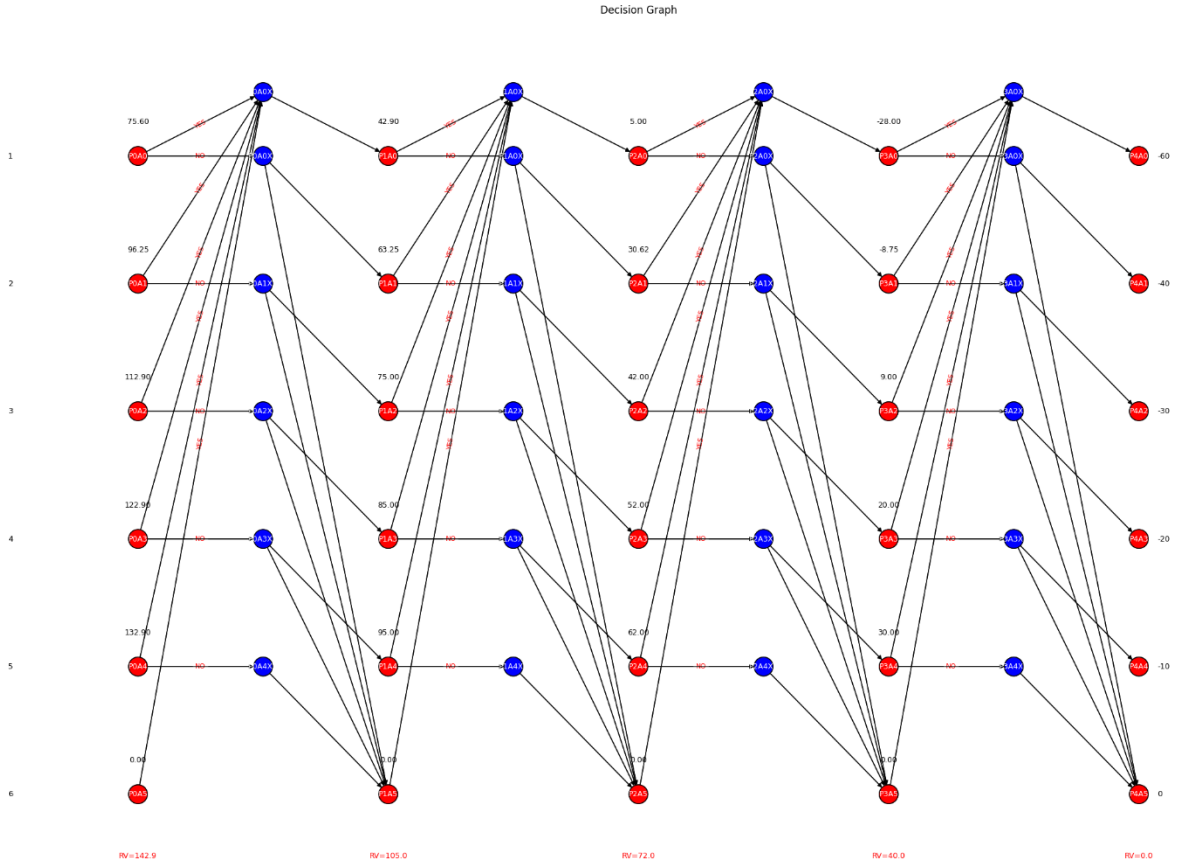

III. Application of game theory in artificial intelligence

The integration of game theory into artificial intelligence (AI) and deep learning represents a promising avenue for enhancing decision-making processes and optimizing system performance in complex environments characterized by multiple interacting agents. This literature review examines several significant contributions in this interdisciplinary field, shedding light on the diverse applications and methodological advances that define this fusion.

In their study, Agrawal and Jaiswal [1] delve into integrating game theory with machine learning and AI to tackle adaptive challenges in multi-agent systems. They emphasize the importance of fostering cooperation and competition among agents for achieving optimal outcomes, highlighting the strategic implications of game-theoretical principles.

Hazra and Anjaria's comprehensive survey [2] explores the application of game theory in addressing architectural and functional issues in AI systems. By modeling strategic interactions through game theory, their work enhances performance and strategic decision-making capabilities, offering insights into the potential of game theory to optimize AI systems' functionality.

Gupta et al. [3] propose a game theory-based framework for privacy-preserving collaborative deep learning in IoT settings. Their approach ensures both data exchange efficiency and privacy in decentralized networks, showcasing the versatility of game theory principles in addressing real-world challenges in AI applications.

Furthermore, research focusing on adversarial deep learning highlights the integration of game theory with AI to anticipate and mitigate adversarial threats. By adopting game-theoretical strategies, AI systems can bolster their robustness and effectiveness in adversarial scenarios, underscoring the significance of game theory in enhancing AI security.

Overall, the reviewed literature collectively underscores the transformative impact of integrating game theory into AI and deep learning, offering valuable insights into the potential applications and methodological advancements in this interdisciplinary field.

IV. Implementation

The combination of game theory and deep learning provides a novel technique for addressing complicated decision-making problems. Game theory provides insight into strategic interactions, deep learning gives powerful data-driven modeling tools. Combining these paradigms allows for the construction of sophisticated models that can successfully handle real-world challenges. In cybersecurity, detecting and synthesizing phishing URLs is challenging. To address this,

researchers have developed a conditional generative adversarial network (GAN) that integrates game theory and deep learning. This GAN includes a generator for crafting adversarial URLs and a discriminator for categorizing URLs as malicious or benign. Game theory guides strategic interactions, deep learning enables pattern recognition to optimize the process.

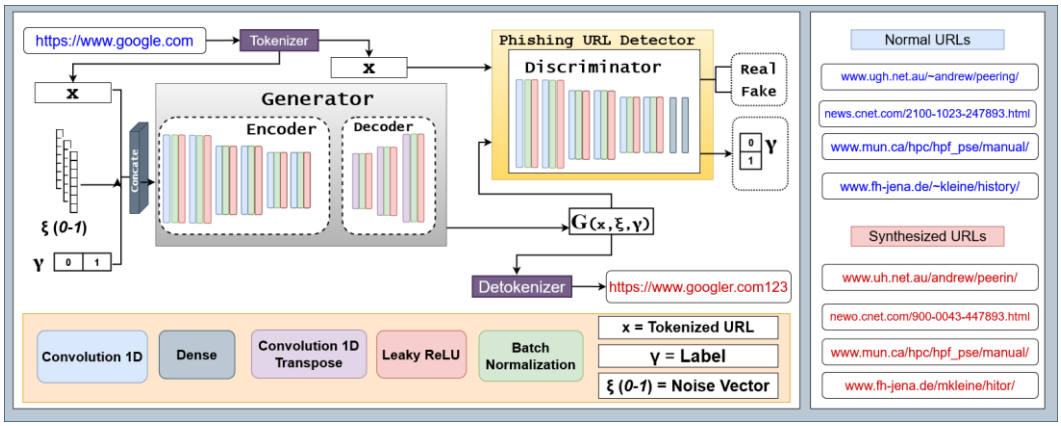

A. Generator

The generator utilizes generative networks with an auxiliary classification module, similar to the Auxiliary Classification GAN architecture. It incorporates a class-conditioned generator and a multi-headed discriminator for categorical classification and adversarial example recognition.

$$G(x,\zeta,y)=\text{generator}(\text{URL } x, \text{ label } y, \text{ noise vector } \zeta)$$

B. Discriminator

In contrast, the discriminator sequentially takes both real URLs and adversarial URLs as input, predicting if the example is real or adversarial and classifying the signal as benign or malicious.

$$D(G(x,\zeta,y),y)=\text{discriminator}(\text{generated URL } G(x,\zeta,y), \text{ label } y)$$

C. Weighted Cost Function and Adversarial Loss

The study employs the LSGAN loss for calculating the adversarial loss and training the Generative Network. The objective function for the conditional GAN includes terms for adversarial loss, classification loss, and reconstruction loss.

$$[(D(G(x,\zeta,y),y)+1)\ 2]$$

D. Game during Model Training

A novel two-person game is contextualized between the pseudo-attacker and the Phishing URL detector. The game is non-cooperative and non-zero-sum, with both players having interlocked actions and utility variables.

E. Game after Model Deployment

Another two-person game is designed for model deployment, played between the real-life attacker and the Phishing URL detector. Similar to the training game, this game is non-cooperative and non-zero-sum, with different action spaces and utility variables.

V. Experiment

A. Dataset:

We utilized a Kaggle dataset containing 500,000 benign and malicious URLs, extracting 50,000 URLs for our study. Each URL, with a maximum length of 200 characters, was represented as a 2-D matrix using a one-hot encoding scheme with 67 unique characters. The dataset can be found on Kaggle under the title "Phishing Site URLs Dataset."

B. Hyper-parameter Tuning:

The code's hyperparameter tuning involves adjusting the number of epochs (default: 149), batch size (default: 70), latent dimension (default: 50), and fixed learning rate (0.0002) for both the discriminator and generator models. These parameters are critical for optimizing the training of the generative adversarial network (GAN) and are chosen based on empirical evidence and established deep learning principles.

C. Training Procedure:

The training process involves several steps to effectively train a Generative Adversarial Network (GAN) for generating synthetic URL data. First, the dataset containing both legitimate and malicious URL samples is prepared and tokenized. Then, the GAN architecture, comprising a generator and a discriminator, is defined. Hyperparameters such as the number of epochs, batch size, and latent dimension are tuned to optimize model performance. During training, the generator and discriminator are alternately trained using batches of real and fake URL samples. The generator learns to produce realistic URL samples from random noise, while the discriminator learns to distinguish between real and fake samples. Throughout training, the model's performance is evaluated using metrics like accuracy, precision, recall, and F1-score. This iterative process

continues until the desired performance level is achieved, ensuring that the GAN can generate high-quality synthetic URL data effectively.

D. Model Evaluation

We assess adversarial URLs against originals using MSE, and SSIM. SSIM scores at 95.249%, indicating strong structural similarity. In URL classification, our model surpasses others, except for those with 1D CNN architectures, due to their potential overfitting. Our discriminator accurately detects adversarial examples, although it performs better with real examples, confirming the superiority of Generative Networks in detecting adversarial examples.

Generator's Performance: Similarity between real and adversarial Phishing URLs.

MSE	**Structural Similarity**	**NRMSE**
0.0003223	**0.990472**	**0.2875**

Phishing URL classification: Comparison of architectures trained and tested on real Phishing URLs

Method	**ACC**	**Sensitivity**	**Precision**	**F1-score**
This Model	**0.9536**	**0.9652**	**0.9433**	**0.9541**
SVM [4]	0.8638	0.8822	0.8505	0.8662
Random Forest [5]	0.8688	0.8508	0.8664	0.8664
CNN [6]	0.9256	0.9109	0.9246	0.9246

Adversarial Example Detection: Discriminator's performance for detecting adversarial examples

ACC	**Sensitivity**	**Specificity**	**F1-sore**
0.7191	0.9652	0.6370	0.6320

VI. Conclusion

This study highlights the benefits of integrating game theory with deep learning in AI, enhancing decision-making and resilience in complex environments. By applying strategic game-theoretical

methods alongside deep learning's capabilities, we've improved AI functionality in various contexts, paving the way for smarter, more secure AI systems. This integration represents a significant advancement in AI, with promising applications in sectors like cybersecurity, encouraging further interdisciplinary research. It would be great idea apply bellman method along with the game theory in the deep learning as it makes the nodes in each layer to learn better in effective way and making the better outcome output in the future aspect as an inspiration.

Acknowledgment

I extend my heartfelt gratitude to Madam Marietta Manolessou for her invaluable guidance, support, and supervision throughout this project. Her expertise has profoundly influenced my research direction. Additionally, I am deeply thankful to my friends for their unwavering encouragement and insightful advice, which have significantly contributed to the success of this work. Their support has been a constant source of motivation and inspiration.

References

[1] "Agrawal and Jaiswal - When Machine Learning Meets AI and Game Theory.pdf."

[2] "Hazra and Anjaria - 2022 - Applications of game theory in deep learning a su.pdf."

[3] D. Gupta, S. Bhatt, P. Bhatt, M. Gupta, and A. S. Tosun, "Game Theory Based Privacy Preserving Approach for Collaborative Deep Learning in IoT." arXiv, Apr. 03, 2021. Accessed: May 05, 2024. [Online]. Available: http://arxiv.org/abs/2103.15245

[4] S. Y. Yerima and M. K. Alzaylaee, "High accuracy phishing detection based on convolutional neural networks," in 2020 3rd International Conference on Computer Applications & Information Security (ICCAIS). IEEE, 2020, pp. 1–6.

[5] H. Shirazi, S. R. Muramudalige, I. Ray, and A. P. Jayasumana, "Improved phishing detection algorithms using adversarial autoencoder synthesized data," in 2020 IEEE 45th Conference on Local Computer Networks (LCN). IEEE, 2020, pp. 24–32

[6] X. Xiao, D. Zhang, G. Hu, Y. Jiang, and S. Xia, "Cnn–mhsa: A convolutional neural network and multi-head self-attention combined approach for detecting phishing websites," Neural Networks, vol. 125, pp. 303–312, 2020. [25] W. Chen, W. Zhang, and